
Electric Guitar

Reference



Modeled Parts









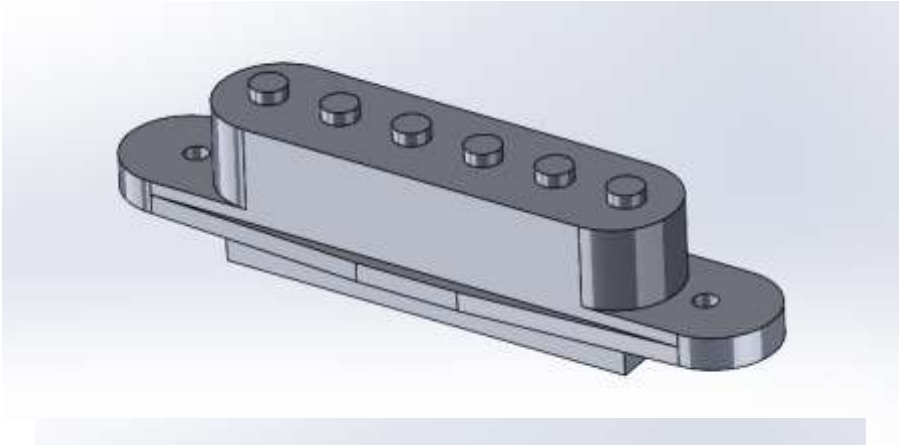

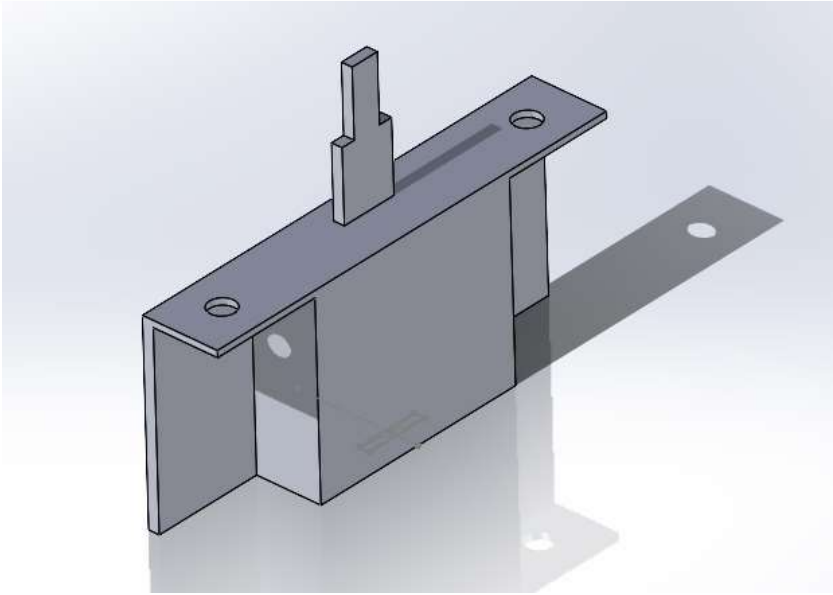


Squier

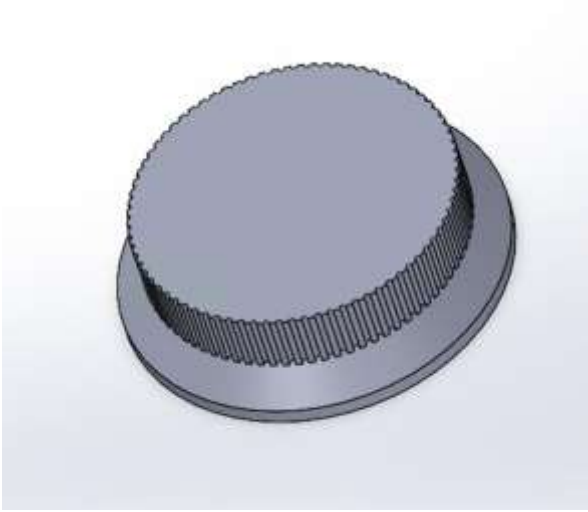

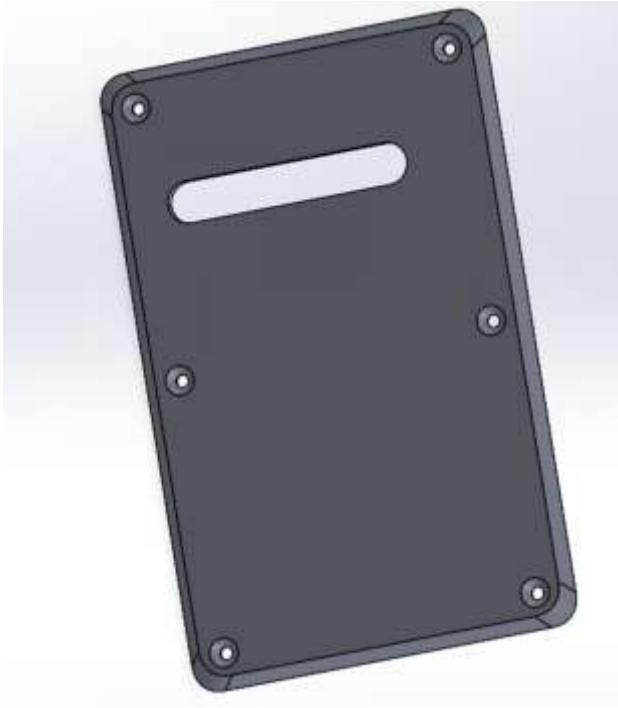



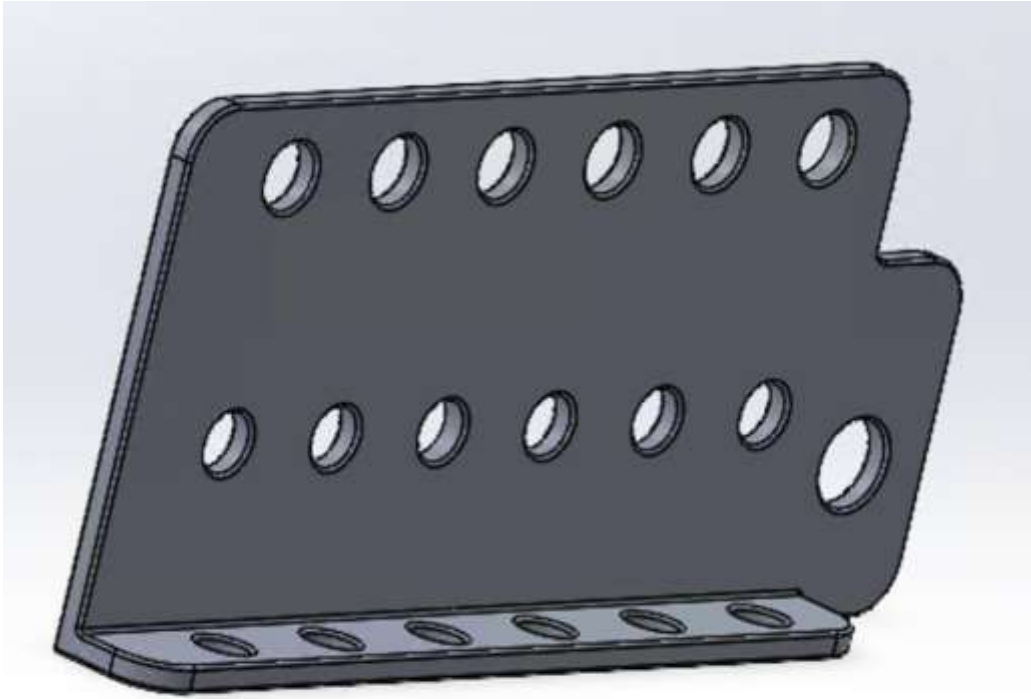



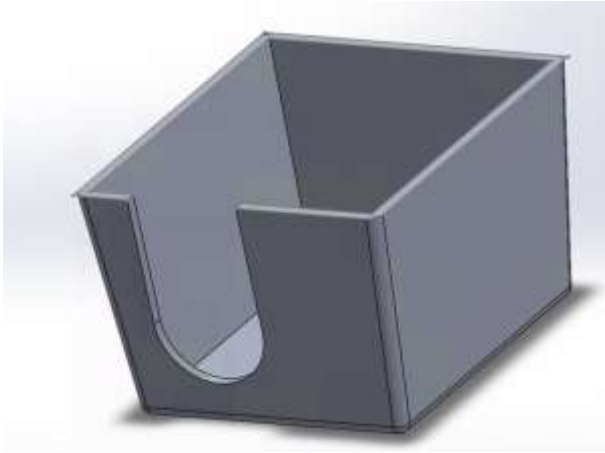

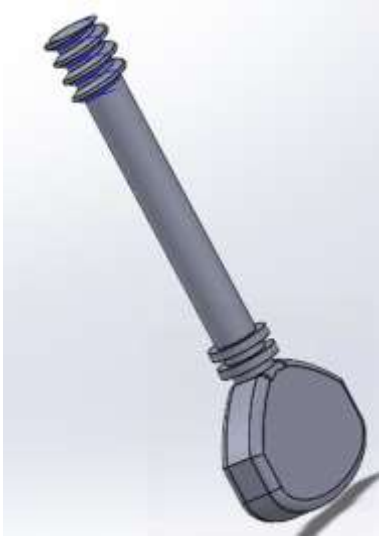



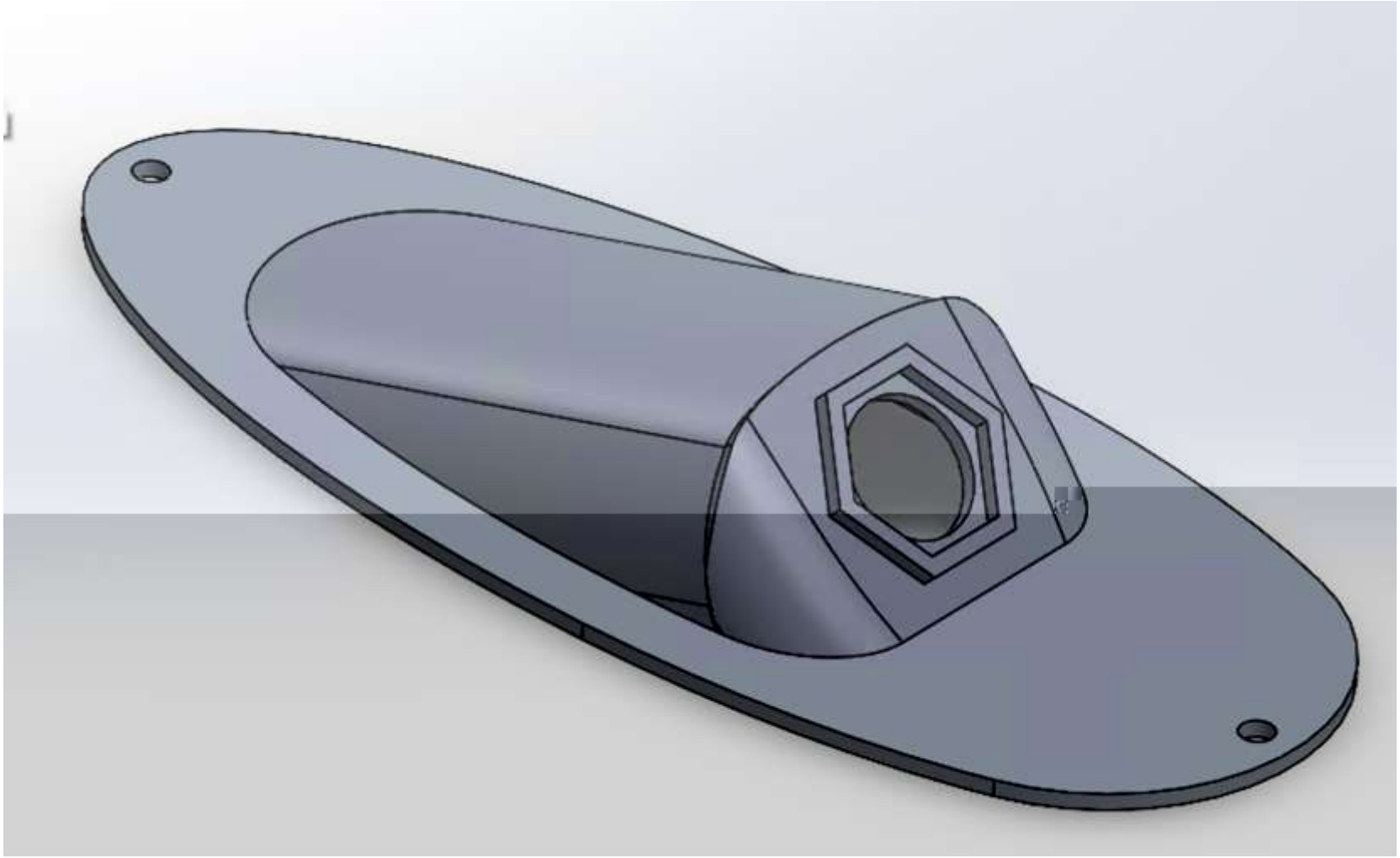

Assembly Model



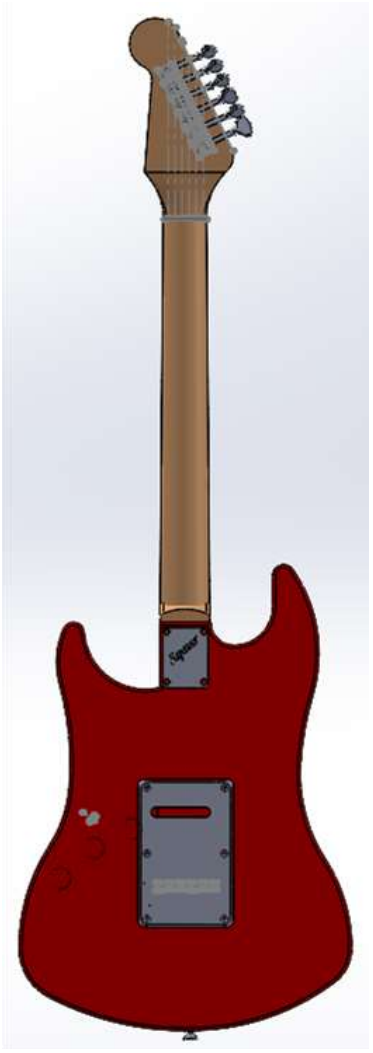

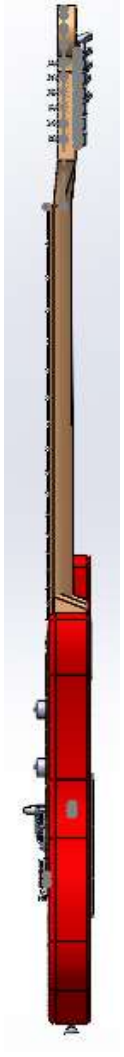







Part Drawings

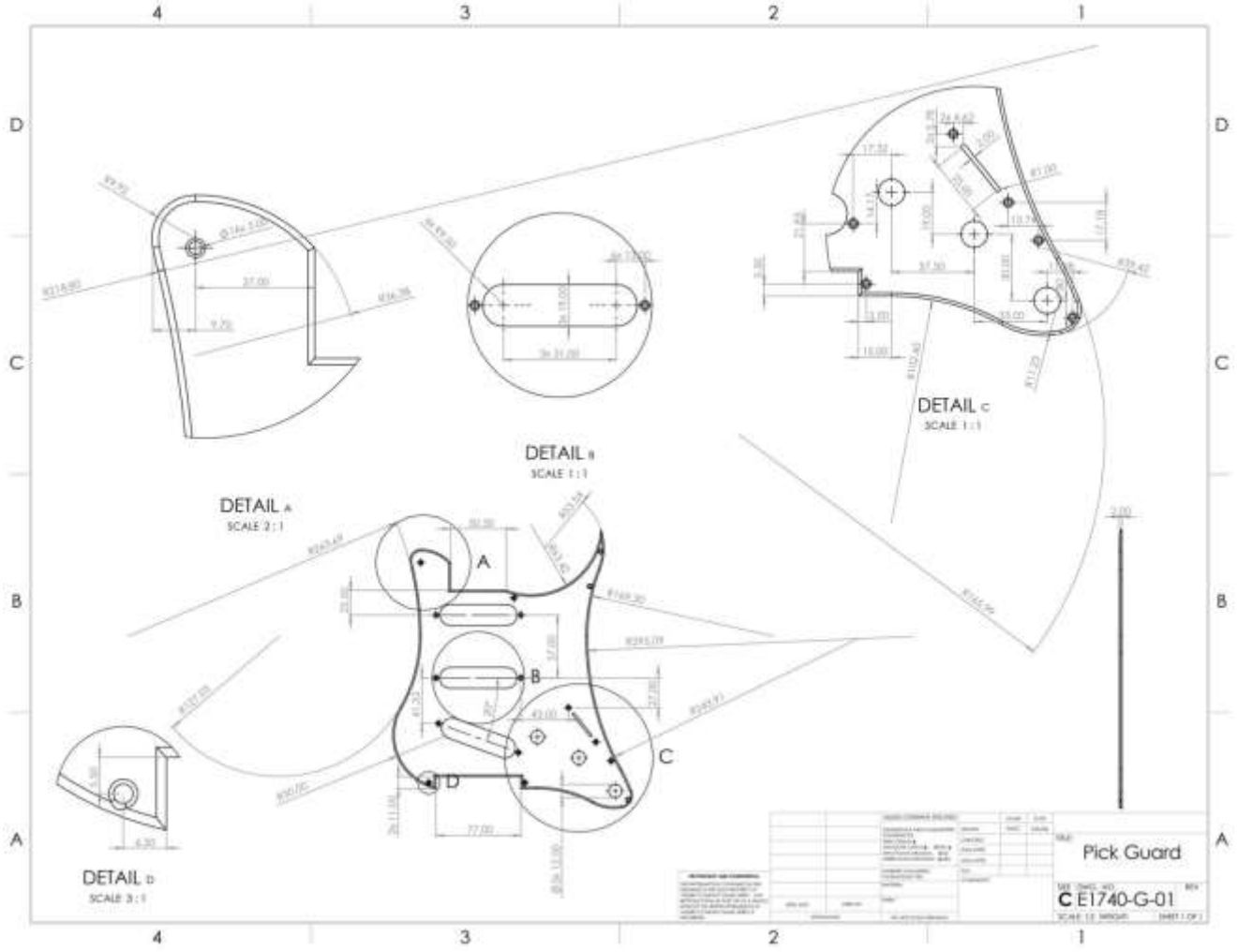
DETAIL A
SCALE 2 : 1
DETAIL B
SCALE 1 : 1
DETAIL C
SCALE 1 : 1
DETAIL D
SCALE 3 : 1
A
B
C
D
Pick Guard
C E1740-G-01

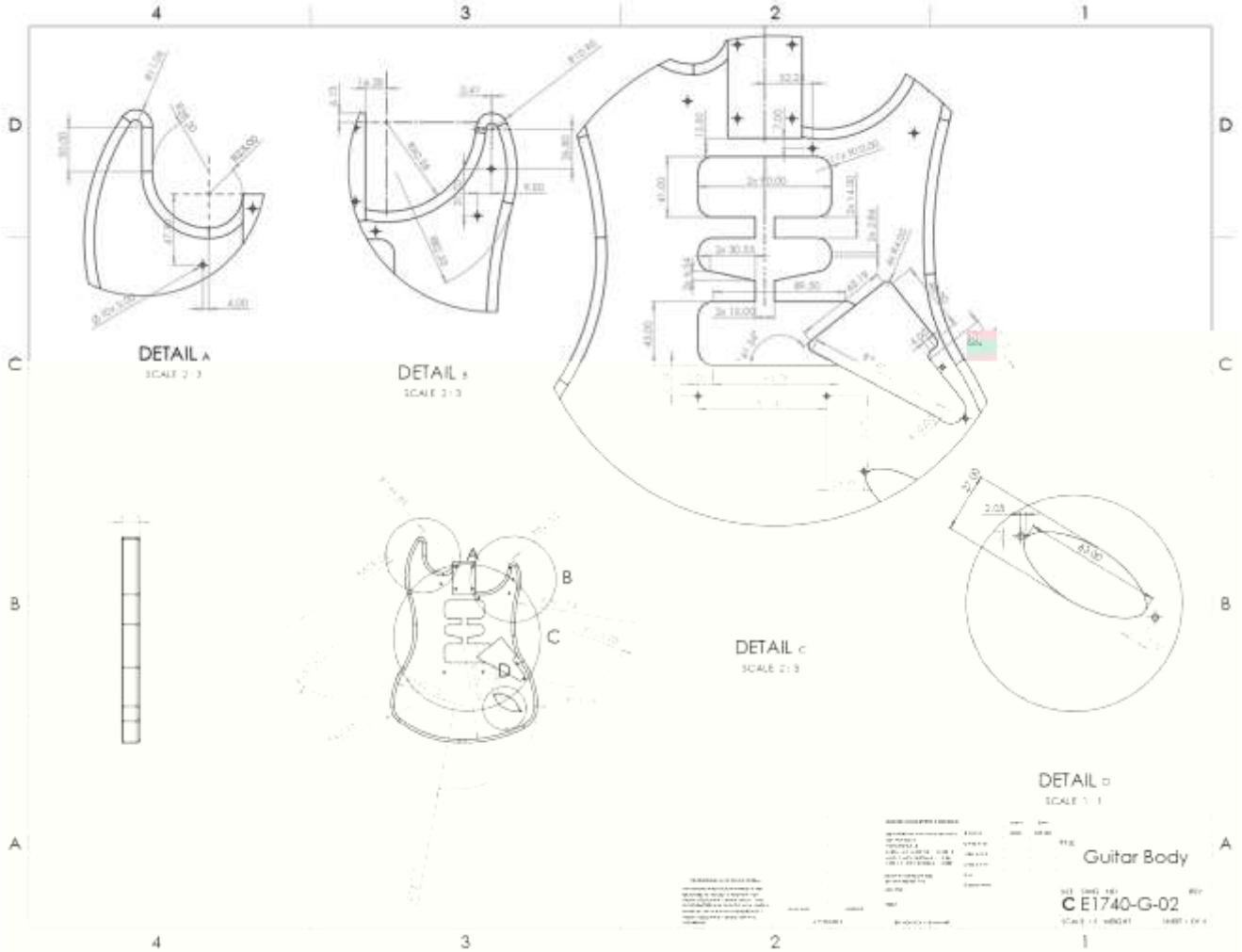
4
3
2
1
D
C
B
A
DETAIL A
SCALE 2 : 3
DETAIL B
SCALE 2 : 3
DETAIL C
SCALE 2 : 3
DETAIL D
SCALE 1 : 1
Guitar Body
C E1740-G-02

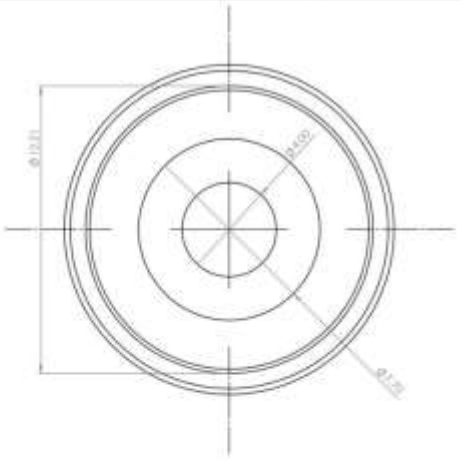



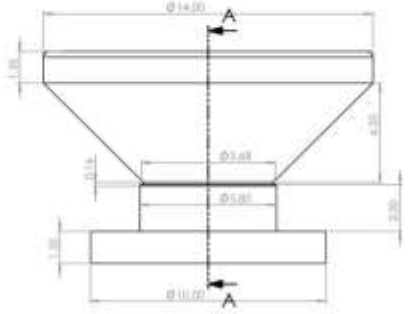

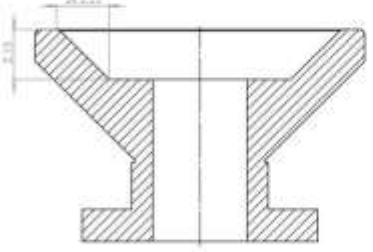

SECTION A-A

Strap Peg

C E1740-G-03

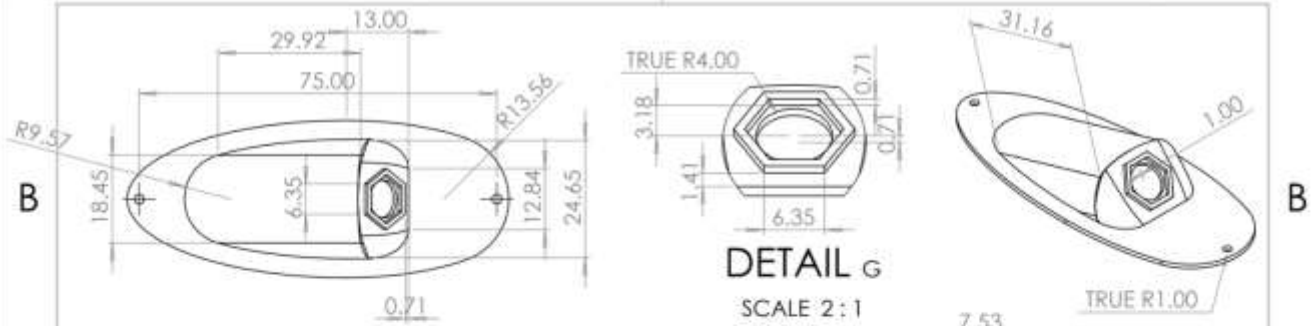

DETAIL G

SCALE 2 : 1



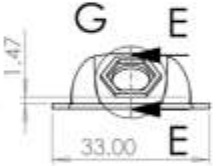

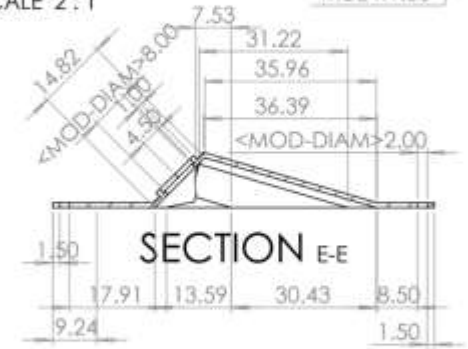

SECTION E-E

		UNLESS OTHERWISE SPECIFIED:		NAME	DATE
		DIMENSIONS ARE IN INCHES TOLERANCES: FRACTIONAL ANGULAR: MACH BEND TWO PLACE DECIMAL THREE PLACE DECIMAL	DRAWN	Kaden	5/11/26
			CHECKED		
			ENG APPR.		
			MFG APPR.		
		INTERPRET GEOMETRIC TOLERANCING PER:	Q.A.		
		MATERIAL	COMMENTS:		
		FINISH			
NEXT ASSY	USED ON				
APPLICATION		DO NOT SCALE DRAWING			

PROPRIETARY AND CONFIDENTIAL

THE INFORMATION CONTAINED IN THIS DRAWING IS THE SOLE PROPERTY OF <INSERT COMPANY NAME HERE>. ANY REPRODUCTION IN PART OR AS A WHOLE WITHOUT THE WRITTEN PERMISSION OF <INSERT COMPANY NAME HERE> IS PROHIBITED.

Electric Guitar Audio Jack

TITLE:

Electric Guitar Audio Jack

SIZE	DWG. NO.	REV
A	jack draw	
SCALE: 1:1	WEIGHT:	SHEET 1 OF 1

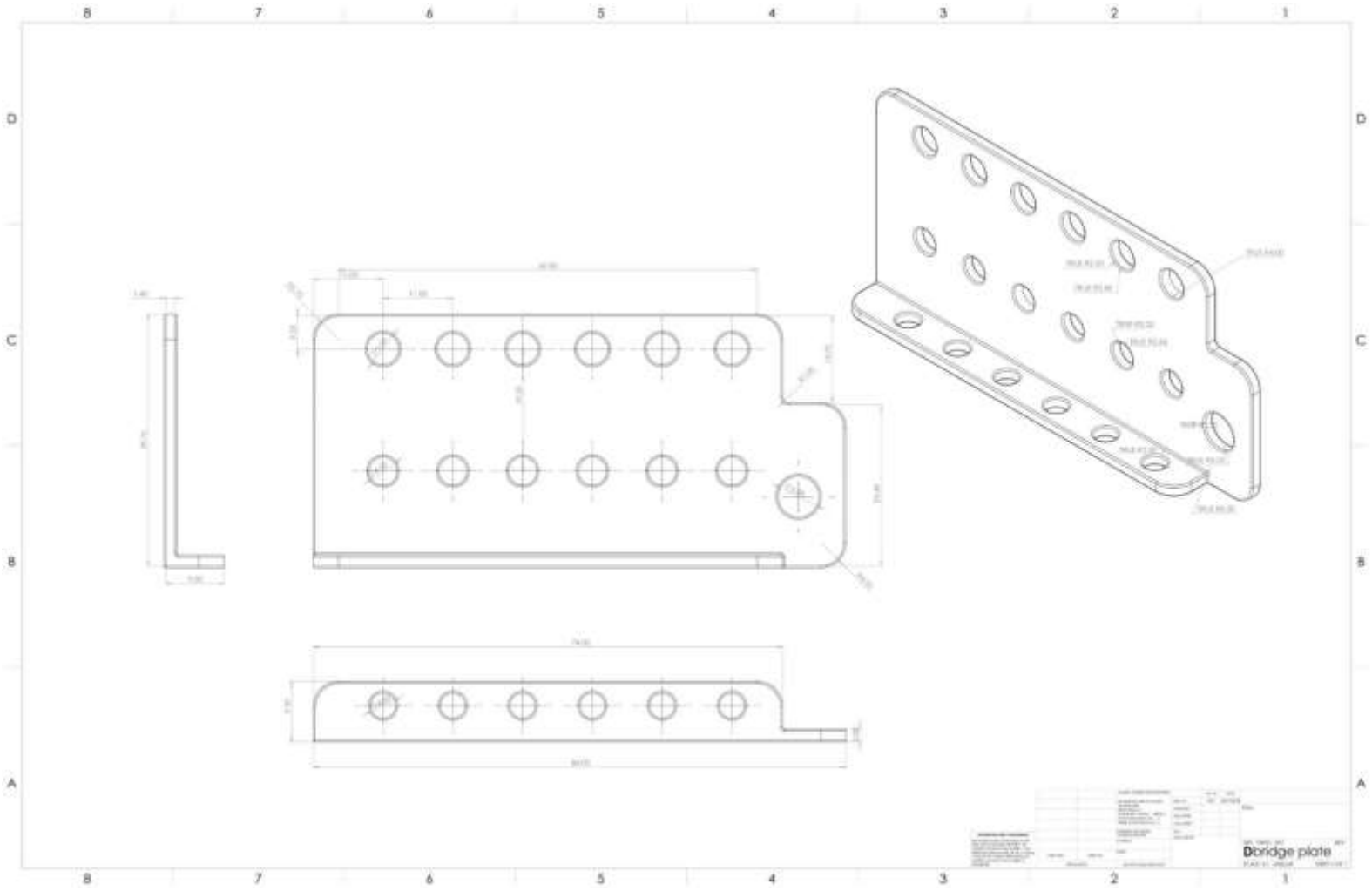
8
7
6
5
4
3
2
1
D
C
B
A
Dbridge plate

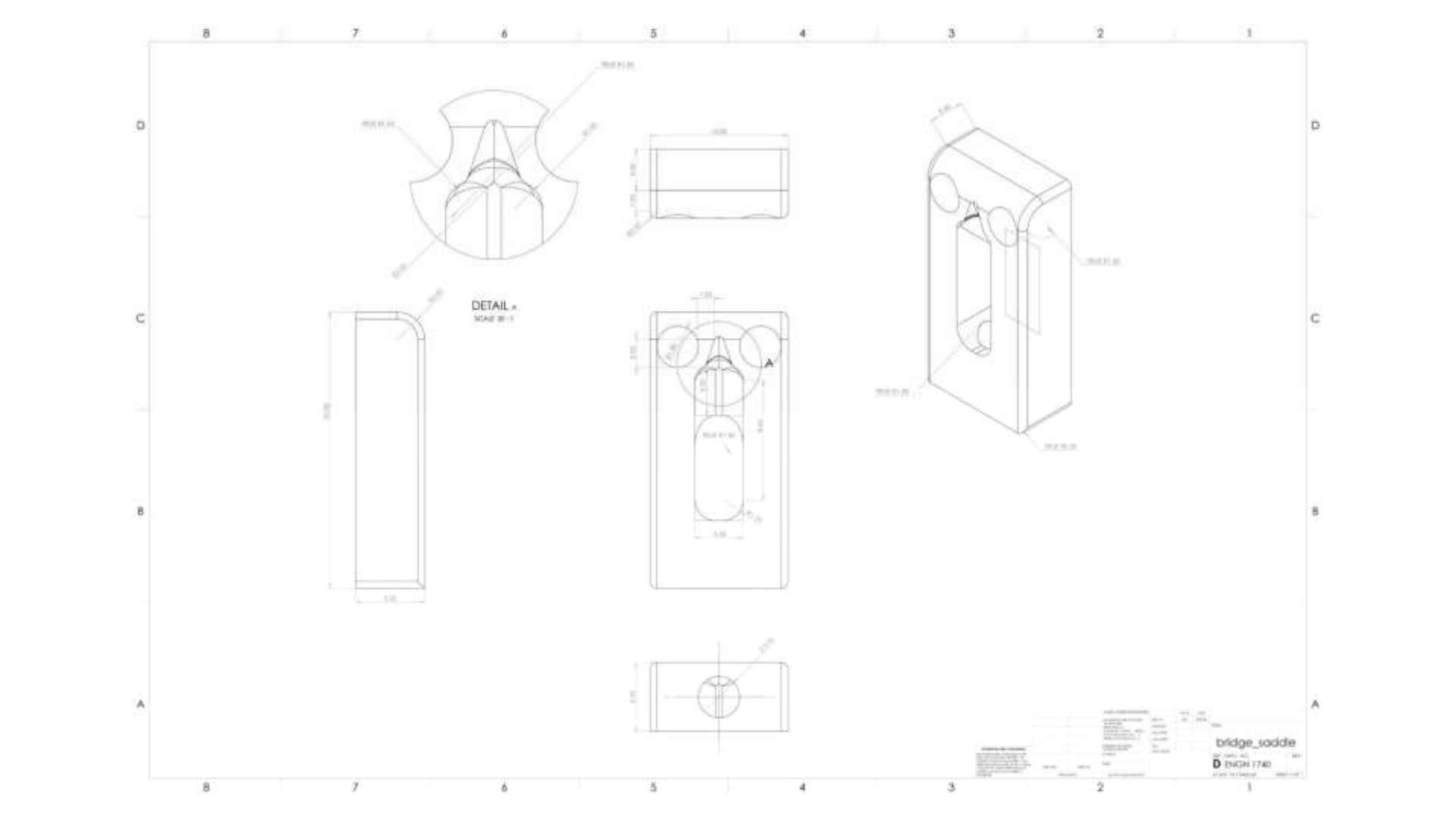
DETAIL A
SCALE 20 : 1
A
bridge_saddle
D ENGN 7740

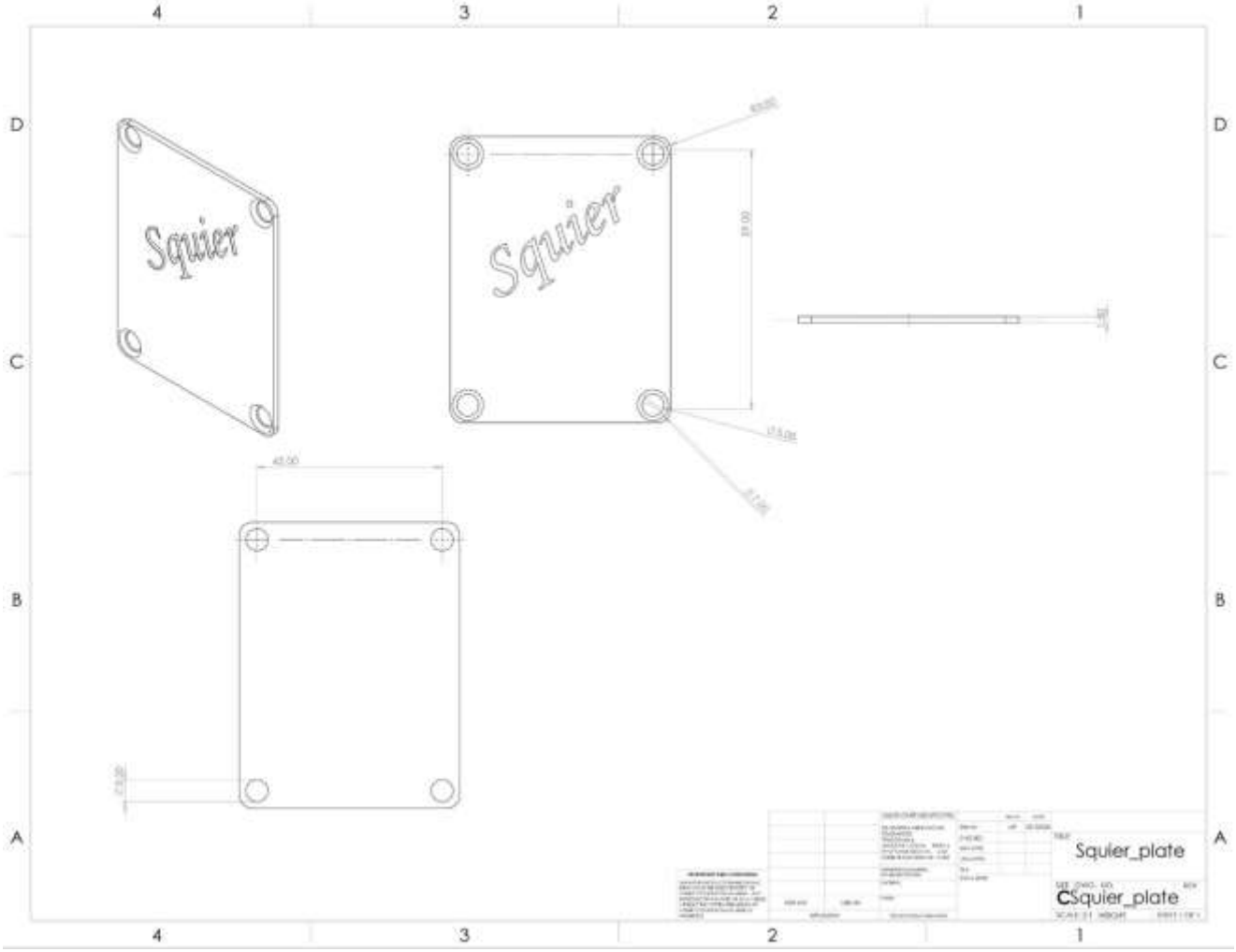
4
3
2
1
D
C
B
A
Squier
Squier
Squier_plate
CSquier_plate





SECTION C-C
SCALE 1 : 1

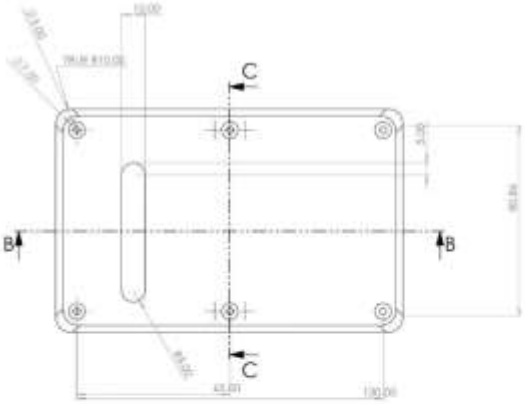





SECTION B-B
SCALE 1 : 1

White_plate

CWhite_plate



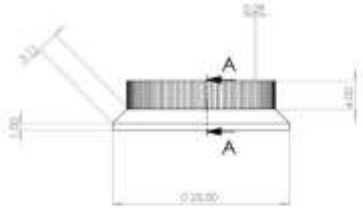



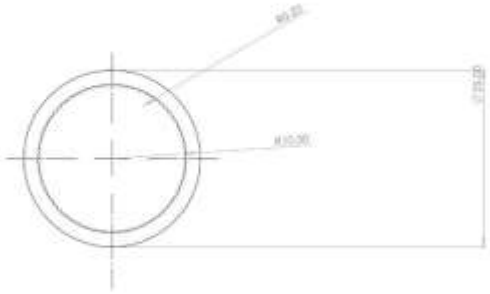

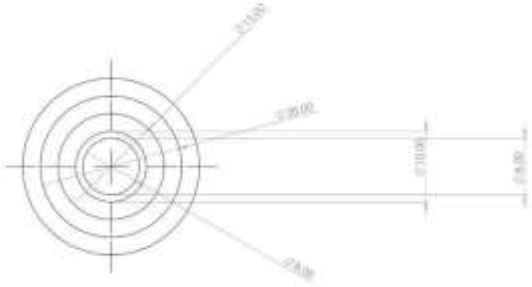

Tone_knob

SEE DWG. NO.

C Tone_knob

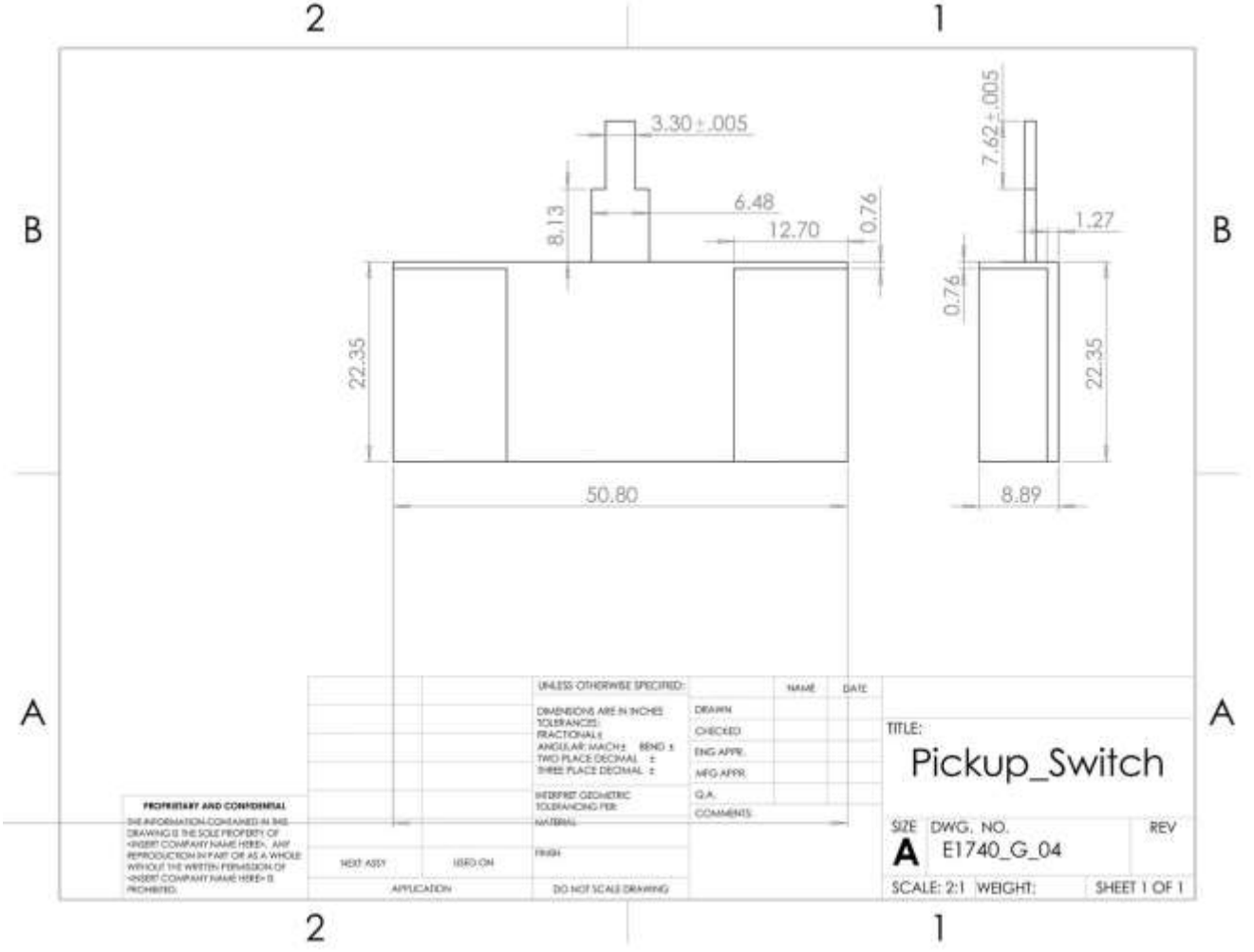
2
1
B
A
3.30 ± .005
8.13
6.48
12.70
0.76
22.35
50.80
7.62 ± .005
1.27
0.76
22.35
8.89
UNLESS OTHERWISE SPECIFIED:
DIMENSIONS ARE IN INCHES
TOLERANCES:
FRACTIONAL ±
ANGULAR: MACH ± BEND ±
TWO PLACE DECIMAL ±
THREE PLACE DECIMAL ±
INTERPRET GEOMETRIC TOLERANCING PER:
MATERIAL
FINISH
NEXT ASSY
USED ON
APPLICATION
DO NOT SCALE DRAWING
NAME
DATE
DRAWN
CHECKED
ENG APPR.
MFG APPR.
Q.A.
COMMENTS:
PROPRIETARY AND CONFIDENTIAL
THE INFORMATION CONTAINED IN THIS DRAWING IS THE SOLE PROPERTY OF <INSERT COMPANY NAME HERE>. ANY REPRODUCTION IN PART OR AS A WHOLE WITHOUT THE WRITTEN PERMISSION OF <INSERT COMPANY NAME HERE> IS PROHIBITED.
TITLE:
Pickup_Switch
SIZE
A
DWG. NO.
E1740_G_04
REV
SCALE: 2:1
WEIGHT:
SHEET 1 OF 1

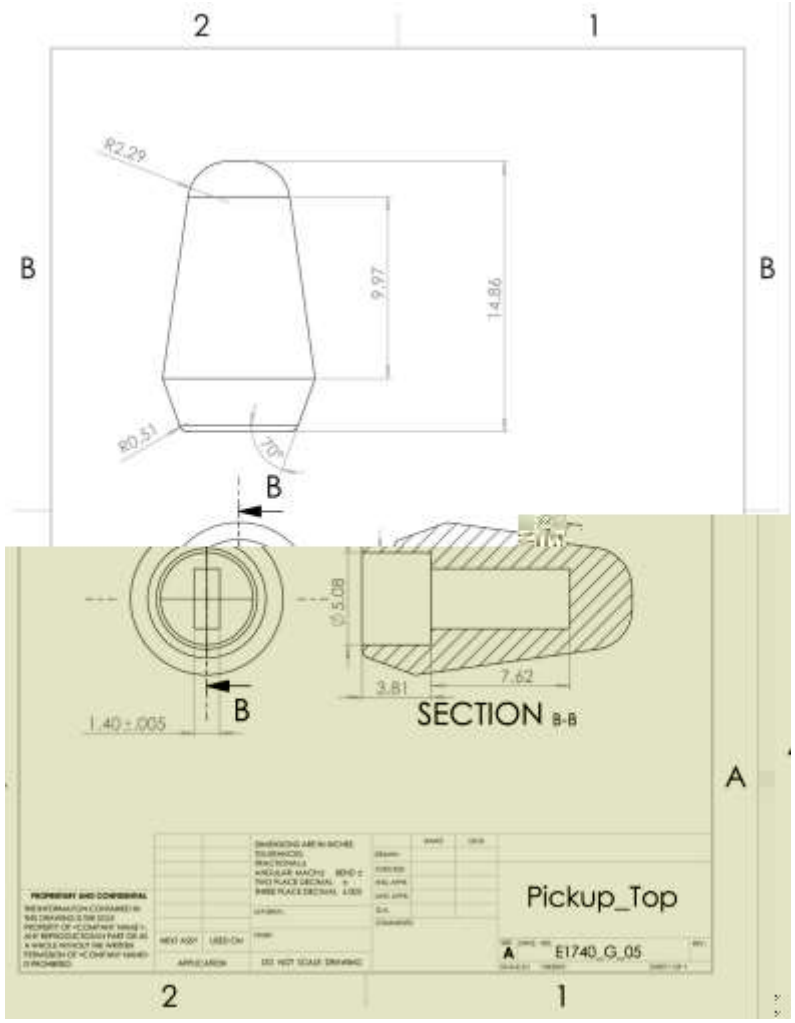
2
1
B
B
R2.29
9.97
14.86
R0.51
70°
B
B
Ø5.08
3.81
7.62
1.40 ± .005
SECTION B-B
A
Pickup_Top
E1740_G_05
2
1

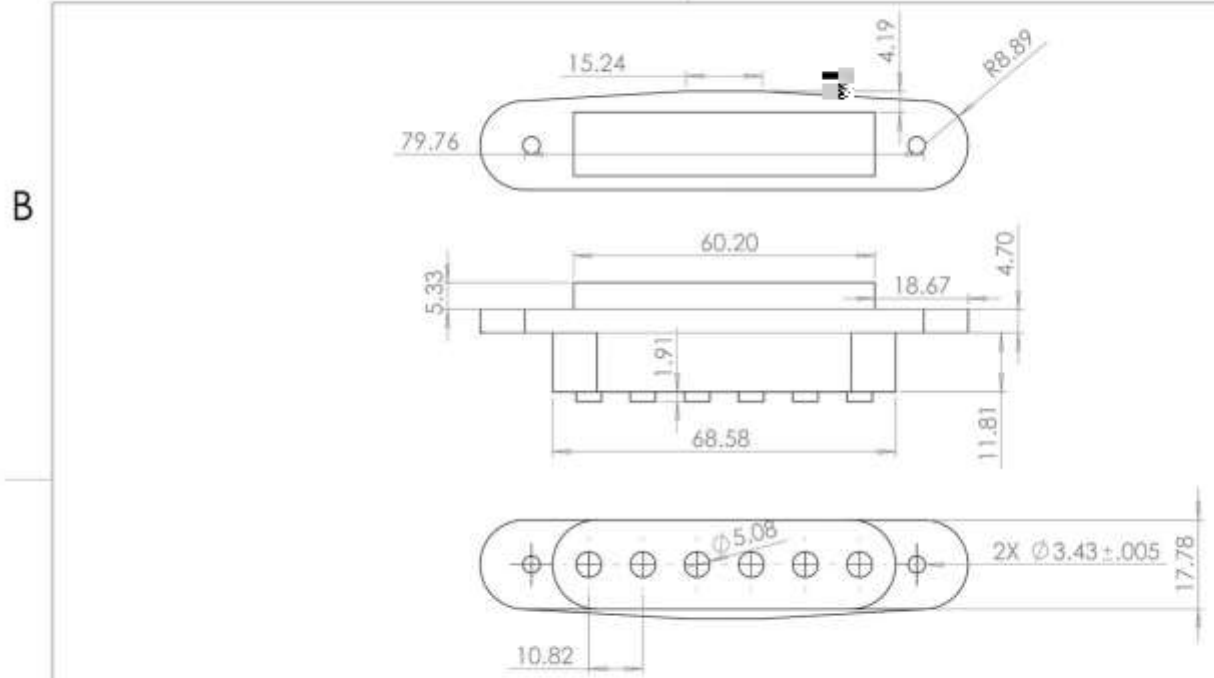

		UNLESS OTHERWISE SPECIFIED:		NAME	DATE
		DIMENSIONS ARE IN INCHES TOLERANCES: FRACTIONAL ± ANGULAR: MACH ± BEND ± TWO PLACE DECIMAL ± THREE PLACE DECIMAL ±.005	DRAWN		
			CHECKED		
			ENG APPR.		
			MFG APPR.		
			Q.A.		
		INTERPRET GEOMETRIC TOLERANCING PER:	COMMENTS:		
		MATERIAL			
NEXT ASSY	USED ON	FINISH			
APPLICATION		DO NOT SCALE DRAWING			

PROPRIETARY AND CONFIDENTIAL

THE INFORMATION CONTAINED IN THIS DRAWING IS THE SOLE PROPERTY OF <INSERT COMPANY NAME HERE>. ANY REPRODUCTION IN PART OR AS A WHOLE WITHOUT THE WRITTEN PERMISSION OF <INSERT COMPANY NAME HERE> IS PROHIBITED.

TITLE:

Pickup

SIZE	DWG. NO.	REV
A	E1740_G_06	

SCALE: 1:1 | WEIGHT: | SHEET 1 OF 1







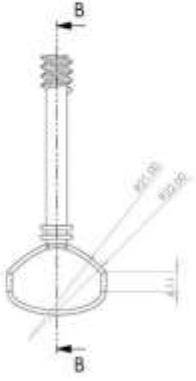

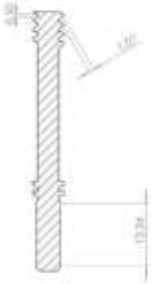

SECTION B-B

tuner

C tuner (1)

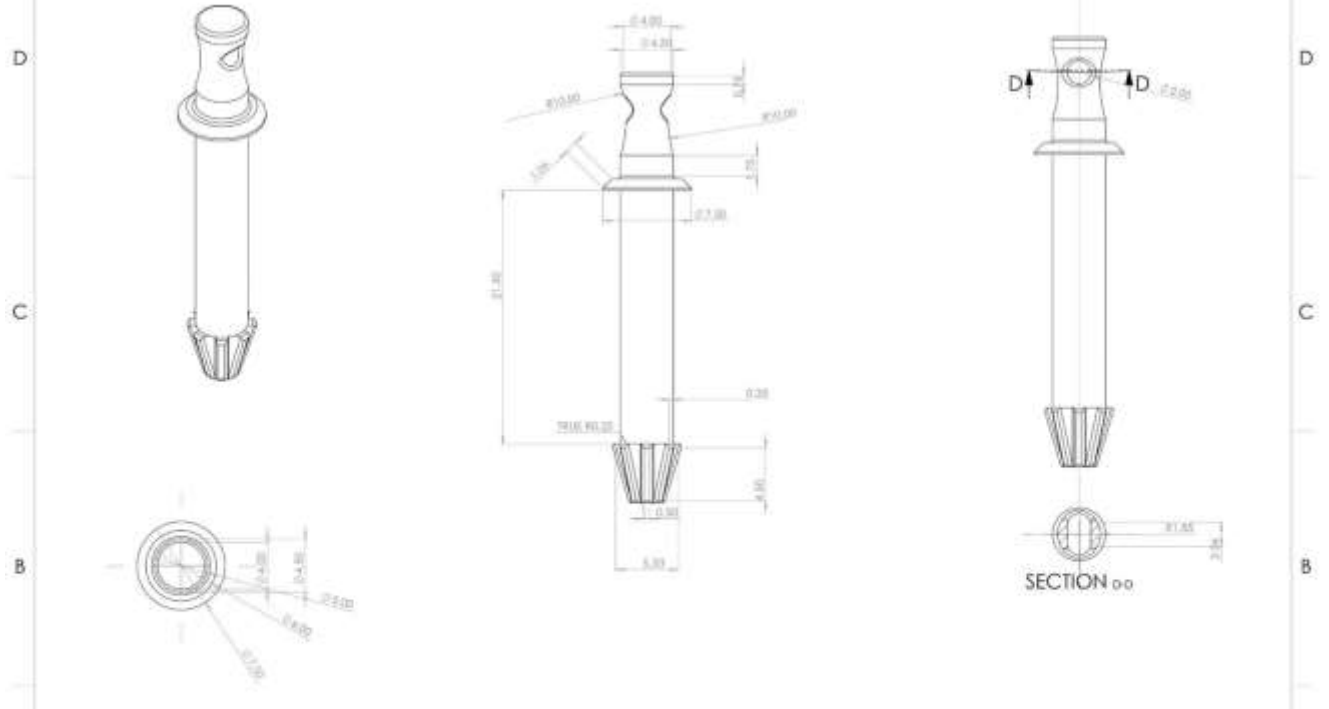
4
3
2
1
D
C
B
A
D
D
SECTION o o
Rib
C
rib (1)

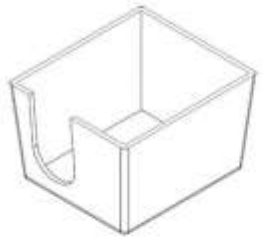

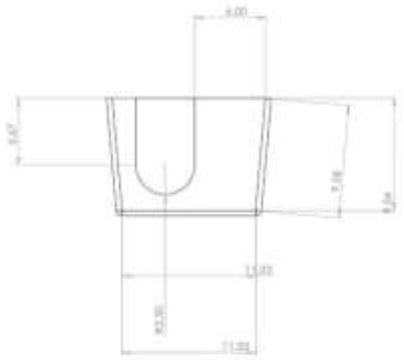

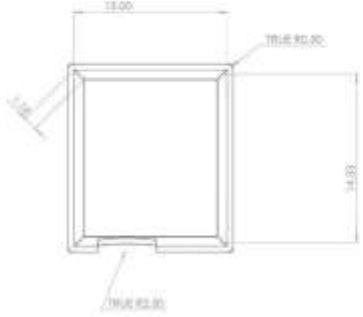

countersink

countersink on bottom (1)



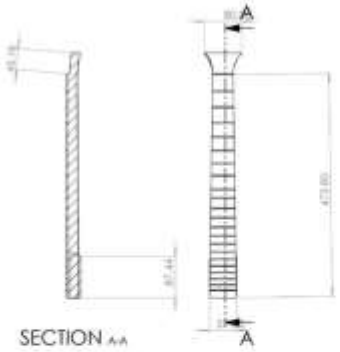

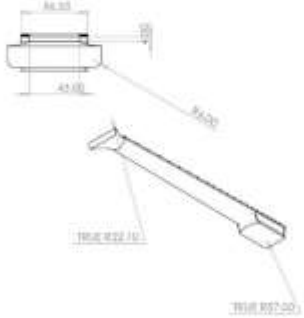



Neck

CE1740-G-16

Assembly Drawing

ITEM NO.	PART NUMBER	DESCRIPTION	QTY.
1	guitar body		1
2	Pickup		3
3	pick guard		1
5	Pickup_Switch		1
4	Switch_Top		1
6	strap peg		1
7	bridge assembly		1
8	Squier_plate		1
9	Tone_knob		3
10	White_plate (1)		1
11	jack		1
12	together_nostring_nogear		1

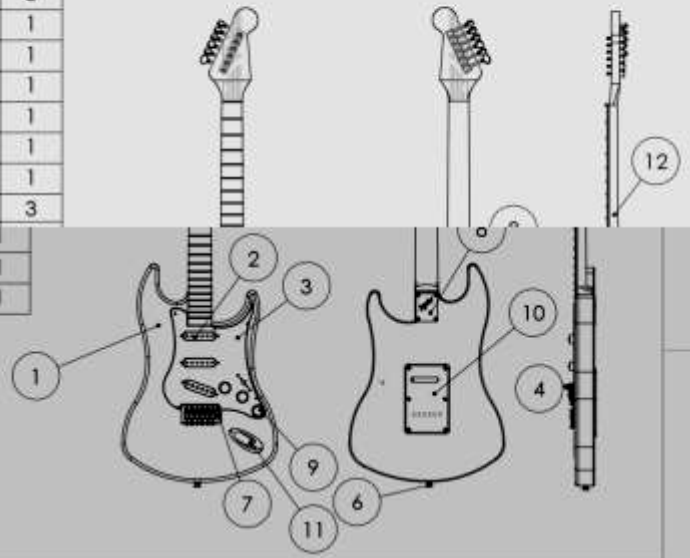

UNLESS OTHERWISE SPECIFIED:

DIMENSIONS ARE IN INCHES
TOLERANCES:
FRACTIONAL ±
ANGULAR: MACH ± BEND ±
TWO PLACE DECIMAL ±
THREE PLACE DECIMAL ±

INTERPRET GEOMETRIC TOLERANCING PER:

MATERIAL

FINISH

NEXT ASSY | USED ON

APPLICATION

DO NOT SCALE DRAWING

	NAME	DATE
DRAWN	ES	5/11/26
CHECKED		
ENG APPR.		
MFG APPR.		
Q.A.		
COMMENTS		

TITLE:

Guitar_Assembly

SIZE	DWG. NO.	REV
A	E1740_G_16	

SCALE: 1:10 WEIGHT: SHEET 1 OF 1

PROPRIETARY AND CONFIDENTIAL

THE INFORMATION CONTAINED IN THIS DRAWING IS THE SOLE PROPERTY OF <INSERT COMPANY NAME HERE>. ANY REPRODUCTION IN PART OR AS A WHOLE WITHOUT THE WRITTEN PERMISSION OF <INSERT COMPANY NAME HERE> IS PROHIBITED.

Analyses

Motion Analysis

Part: Tone Knob 1

Motion Type: Rotary Motor

- 270° over 0.75 seconds

Measurement: Displacement over time

Result:

- As expected, the symmetry of the part led to a smooth displacement when a constant force was applied



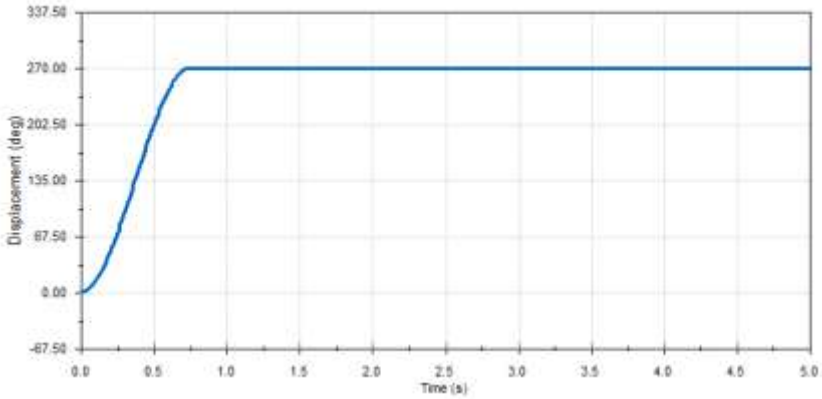

Structural Analysis

Part: Main Body

Material: Alder Wood

Result:

- Weakest: bridge and bottom hole
- Least amount of material + stress concentration

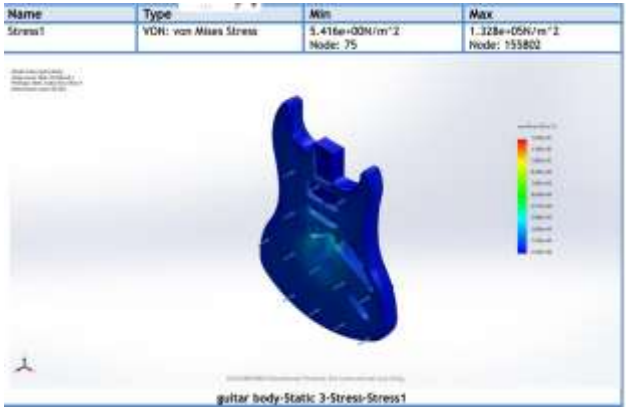

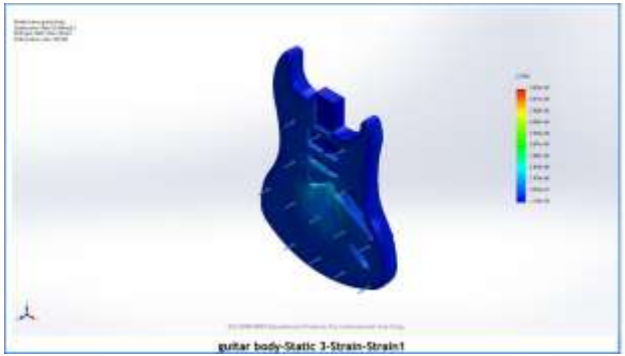

Material Properties

Model Reference	Properties
	**Name:** Alder Wood **Model type:** Linear Elastic Isotropic **Default failure criterion:** Unknown **Tensile strength:** 9.4e+07 N/m^2 **Elastic modulus:** 1.147e+10 N/m^2 **Poisson's ratio:** 0.4 **Mass density:** 425 kg/m^3 **Shear modulus:** 7e+06 N/m^2

Thermal Analysis

Part: Pickup

Material: Copper (M.P. = 1500 K)

Highest Expected Temperature = 339 K

Load name	Load Image	Load Details
Temperature-1		Entities: 1 face(s) Temperature: 400 Kelvin
Convection-1		Entities: 34 face(s) Convection Coefficient: 5 W/(m^2.K) Time variation: Off Temperature variation: Off Bulk Ambient Temperature: 293 Kelvin Time variation: Off

Study Results

Name	Type	Min	Max
Thermal1	TEMP: Temperature	3.997e+02Kelvin Node: 1968	4.000e+02Kelvin Node: 59

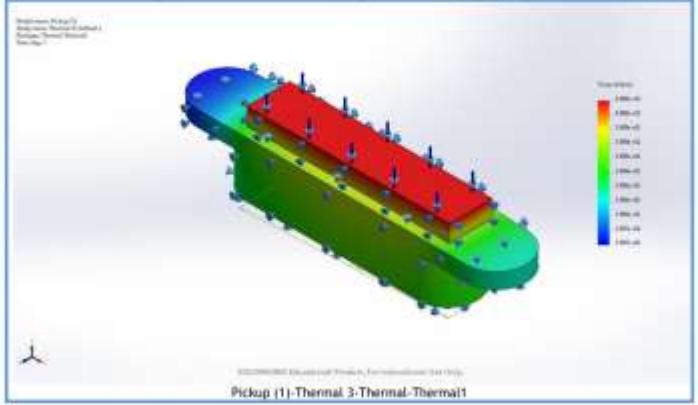

Pickup (1)-Thermal 3-Thermal-Thermal1

CAM Instructions

Part: Back Plate

g-code

Milled Parts:

- 6 Holes
- Middle Area
- Fillet Edges

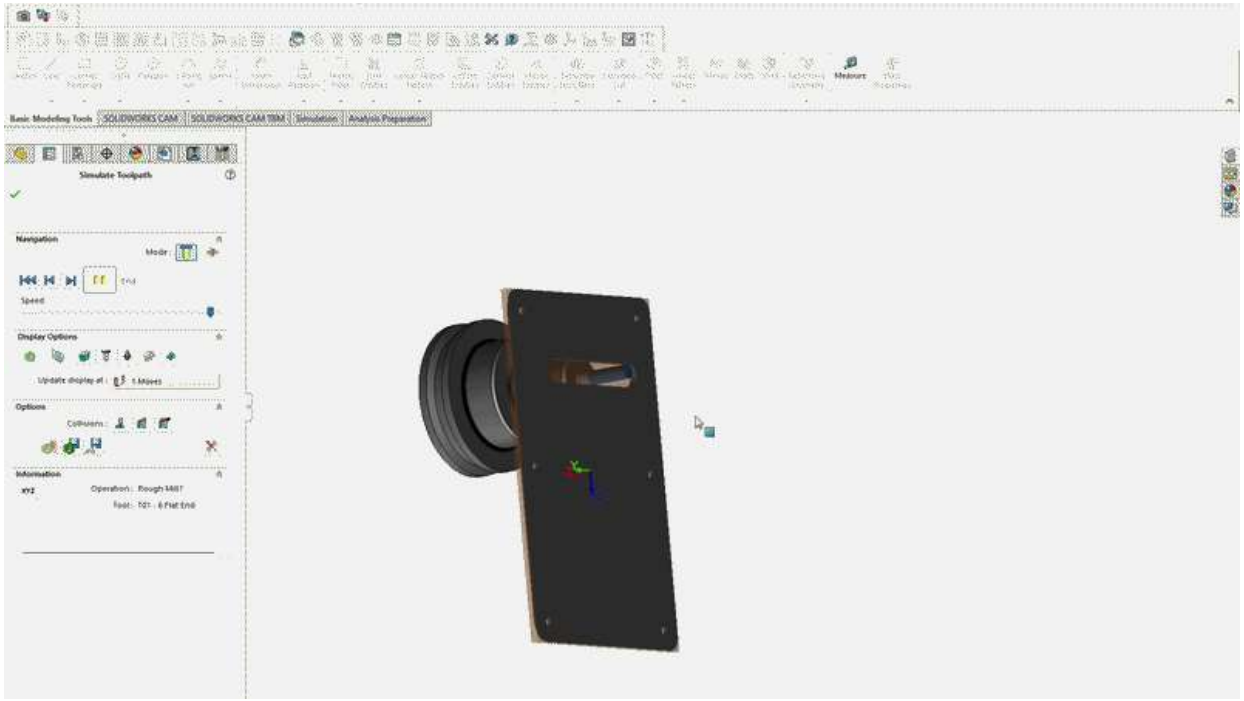

Tolerance Stack

Test tolerance effects on string alignment from neck to bridge
Analyzed distance from left bridge edge to inside right edge of high-e string holder in nut (53.51 mm)
Min and Max were both 53.506mm, meaning that the tested tolerances in body, neck, pick guard, and bridge were inconsequential to the string alignment



CFD Analysis

Part: Audio Jack

Material: Polished Aluminum

Result:

- Greatest pressure at the audio jack input hole
- Reduced fluid velocity around the shell, increased through the audio jack hole.

